A Term Project

(ELECTRONIC CIRCUIT PROJECT**)**

Report of

Automatic Power Saving System Using Bidirectional IRs

Submitted by

Arpan Dwarkadas Bhuva

B. Tech. Sem. V
Electronics & Communication
under the supervision
of
Prof. Himanshu Prajapati

Dharmsinh Desai University
Department of Electronics and Communication
Faculty of Technology
Nadiad - 387001

Acknowledgement

We would like to express our heartfelt gratitude to **Prof. Himanshu Prajapati**, whose valuable guidance, technical expertise, and continuous encouragement have been fundamental to the successful completion of our project, *Automatic Power Saving System using IR Sensors*. His insightful suggestions and dedicated mentorship helped shape the project and provided us with a strong foundation throughout this journey.

We also extend our sincere appreciation to **Prof. (Dr.) Purvang Dalal**, Head of the Department of Electronics and Communication. His visionary leadership and constant support for research and innovation within the department have greatly inspired us. His commitment to academic excellence has played a significant role in motivating us to pursue this project with dedication.

Our thanks are also due to all the **faculty members and fellow students** of the Department of Electronics and Communication for their constructive feedback, valuable discussions, and encouragement. Their collaborative spirit has enriched our learning experience and contributed to the improvement of this project.

Finally, we would like to acknowledge the unwavering support of our **family and friends**, whose motivation and belief in our abilities have been a constant source of strength. Their encouragement helped us overcome challenges and stay committed throughout the development of this project.

Abstract

The **Automatic Power Saving System using IR Sensors** is designed to intelligently optimize energy consumption by detecting human presence and controlling electrical loads accordingly. This system employs Infrared (IR) sensing technology to monitor occupancy in a given space and activate or deactivate connected appliances based on real-time movement detection. By integrating a microcontroller-based decision unit with efficient IR sensor modules, the system ensures that electrical devices operate only when required, thereby significantly reducing unnecessary power wastage.

The project highlights the growing need for smart energy management solutions in residential, commercial, and industrial environments. With rising energy costs and increasing emphasis on sustainability, automated systems like this offer a practical and reliable approach to minimizing power consumption without compromising user convenience. The system is designed to be scalable, low-cost, and easy to implement, making it suitable for a wide range of applications such as classrooms, corridors, offices, and public spaces.

This project also underscores the importance of adopting sensor-based automation to promote responsible energy usage. Through efficient hardware integration, precise sensing, and simple yet effective control logic, the Automatic Power Saving System demonstrates how embedded technologies can contribute to sustainable development. The results obtained from testing validate the system's ability to respond accurately to occupancy changes and maintain consistent energy-saving performance.

Table Of Contents

Acknowledgement I

1. Introduction 1

1.1 Background 1

1.2 Problem Statement 1

1.3 Objectives 1

1.4 Scope of the Project 2

1.5 Significance of the Project 2

2.1 Introduction to Sensing and Control System 3

2.2 IR Sensor Module 3

2.3 IC CD40110 (Up/Down Counter) 4

2.4 Relay Module 5

Key Features: 5

2.5 Resistors 5

2.6 Capacitors 6

2.7 Optocoupler Module 6

2.8 7-Segment Display (Common Cathode) 6

2.9 NAND Gate IC 7

2.10 Summary of System Components 8

3.1 Overview of the Design Process 8

3.1.1 IR Sensor Detection System 8

3.1.2 Counting and Logic Control 8

3.1.3 Display Unit 9

3.1.4 Zero Detection and Safety Logic 9

3.1.5 Relay Load Control 9

3.2 Part 1: IR Sensor Detection Circuit 9

3.2.1 IR Sensor Configuration 9

3.3 Part 2: Up/Down Counting Using CD40110 9

3.3.1 Counter Design 9

3.3.2 Up/Down Functionality 9

3.4 Part 3: Display System (7-Segment Displays) 10
3.4.1 Visibility 10
3.5 Part 4: Zero Detection Logic 10
3.5.1 NAND Gate Implementation 10
3.6 Part 5: Relay-Based Load Control 10
3.6.1 Relay Circuit 10
3.6.2 Optocoupler Isolation 10
3.6.3 Expected Output 10
3.7 Breadboard/Proteus Implementation 11
3.8 Challenges and Solutions 12
4.1 Overview of Testing Process 14
4.2 Testing of IR Sensor Modules 14
4.2.1 Observed Output from IR Sensors 14
4.3 Testing of Counting System (CD40110 ICs) 14
4.3.1 Measurement of Counting Output 14
4.4 Testing of Zero Detection Logic 15
4.4.1 Zero Detection Output 15
4.5 Testing of Relay Module 15
4.5.1 Relay Operation Observation 15
4.6 Final System Testing (Complete Integration) 15
4.6.1 Combined System Output 15
4.7 Challenges Encountered During Testing 16
4.8 Summary of Testing and Results 16
5. Design Optimization and Future Improvements 16
5.1 Design Challenges Encountered 17
5.1.1 IR Sensor Sensitivity Issues 17
5.1.2 Accurate Counting and Synchronization 17
5.1.3 Relay Response Delay 17
5.2 Design Optimization Strategies 17
5.2.1 Improved IR Sensor Modules 17
5.2.2 Enhanced Signal Filtering 17

5.3 Scalability of the System 17
5.3.1 Multi-Room Automation 18
5.3.2 Modular Expansion 18
5.4 Future Improvements and Recommendations 18
5.4.1 Use of PIR Sensors 18
5.4.2 Smart Timer Features 18
5.4.3 Integration with Smart Lighting 18
5.5 Environmental and Economic Impact 18
5.5.1 Energy Efficiency 18
5.5.2 Cost Savings 19
5.6 Conclusion of Design Optimization 19

List of Figures

Figure 1 IR Sensor Module 3
Figure 2 IC CD40110 4
Figure 3 Relay Module 5
Figure 4 Optocoupler Module 6
Figure 5 Push Button 7
Figure 6 Proteus Simulation 11
Figure 7 Breadboard Implementation 11
Figure 8 PCB Implementation 12
Figure 9 Working 13

1. Introduction

1.1 Background

In modern residential, commercial, and industrial environments, energy efficiency has become a critical requirement due to increasing electricity consumption and rising energy costs. A significant portion of electrical energy is often wasted when lights, fans, and other appliances remain switched on despite the absence of occupants. This unnecessary power consumption not only increases operational costs but also places additional load on the power grid.

Automation technologies especially sensor-based systems offer a practical solution for reducing such energy wastage. Infrared (IR) sensors, which detect human presence through motion or thermal signatures, play a vital role in automating energy control mechanisms. By integrating IR sensors with microcontroller-based control systems, electrical loads can be intelligently managed to ensure that appliances operate only when required.

This project focuses on developing an **Automatic Power Saving System using IR sensors**, where appliances are turned ON upon detecting human presence and switched OFF when the area becomes unoccupied. Such systems are particularly useful in classrooms, corridors, offices, parking areas, and other frequently used spaces where manual switching is often neglected.

1.2 Problem Statement

A major challenge in energy conservation today is the widespread issue of appliances being left ON unintentionally, resulting in significant power wastage. Traditional manual switching is highly unreliable in public or shared spaces, where users may forget or choose not to switch OFF appliances.

The problem addressed in this project is the development of an efficient and cost-effective system that automatically controls electrical loads using IR sensors. The system must accurately detect occupancy and manage power delivery with minimal false triggers. Ensuring consistent operation and maintaining low implementation cost are the key challenges in designing such a system.

1.3 Objectives

The main objectives of this project are as follows:

1. **Occupancy Detection Using IR Sensors:**
   Implement an IR sensor-based system capable of accurately detecting human presence in a given area.
2. **Automatic Load Control:**
   Design a control circuit that automatically switches electrical appliances ON or OFF based on real-time sensor input.

3. **Minimize Power Wastage:**
   Reduce unnecessary energy consumption by ensuring appliances operate only when required.
4. **Enhance Efficiency and Reliability:**
   Ensure stable, responsive, and fault-free operation under different environmental conditions.
5. **Testing and Evaluation:**
   Analyze system performance, response accuracy, and power-saving effectiveness to identify areas of improvement.

1.4 Scope of the Project

This project includes the design, development, and testing of an automatic power-saving system using IR sensors and a microcontroller-based switching circuit. The system is intended for use with common AC appliances such as lights and fans.

The scope primarily covers:

- IR-based occupancy detection
- Automated switching mechanism
- Basic control logic implementation
- Testing under indoor environmental conditions

1.5 Significance of the Project

The increasing demand for energy-efficient systems makes automatic power-saving solutions essential in today's world. This project demonstrates how IR sensors can be effectively used to reduce power wastage with minimal human intervention. By automating the control of electrical loads, the system enhances energy efficiency, lowers electricity bills, and promotes responsible energy usage.

Although the current system focuses on basic occupancy detection, it provides a strong foundation for future advancements such as intelligent lighting systems, and adaptive energy management. The simplicity, affordability, and reliability of the design make it suitable for widespread implementation across various environments.

In summary, this project presents a practical approach to energy conservation by utilizing IR sensors and embedded control systems. It highlights both the theoretical concepts and practical applications of automation in modern power-saving technologies.

.

2. System Components

This topic describes the key hardware components used in the development of the Automatic Power Saving System. Each component has been selected based on its functionality, availability, and compatibility with the overall design. The sections below explain the purpose, configuration, and significance of each component in the system.

2.1 Introduction to Sensing and Control System

In this project, human detection is the primary factor controlling the switching of electrical appliances. Infrared (IR) sensors are used to detect the presence or movement of a person entering or leaving a room. The signals from the sensors are processed using counting ICs, logic gates, and display modules to determine occupancy. Based on the occupancy count, the system automatically turns the load ON or OFF through a relay module.

The integration of sensors, counters, logic circuits, and a relay ensures reliable, automated power management with minimal human intervention.

2.2 IR Sensor Module

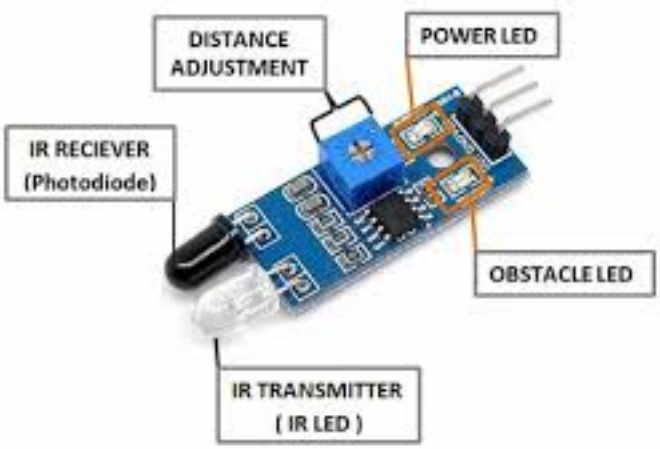

Figure 1 IR Sensor Module

IR sensors serve as the core detection units in the system. Two IR sensor modules are placed at the entrance to detect entry and exit movements. By analyzing the sequence in which the IR sensors are triggered, the system identifies whether a person has entered or exited the room.

Key Features:

- Detects human movement using infrared light interruption
- Provides digital output for easy interfacing
- Adjustable sensitivity
- Quick response time

These sensors ensure accurate detection, enabling dependable occupancy monitoring.

2.3 IC CD40110 (Up/Down Counter)

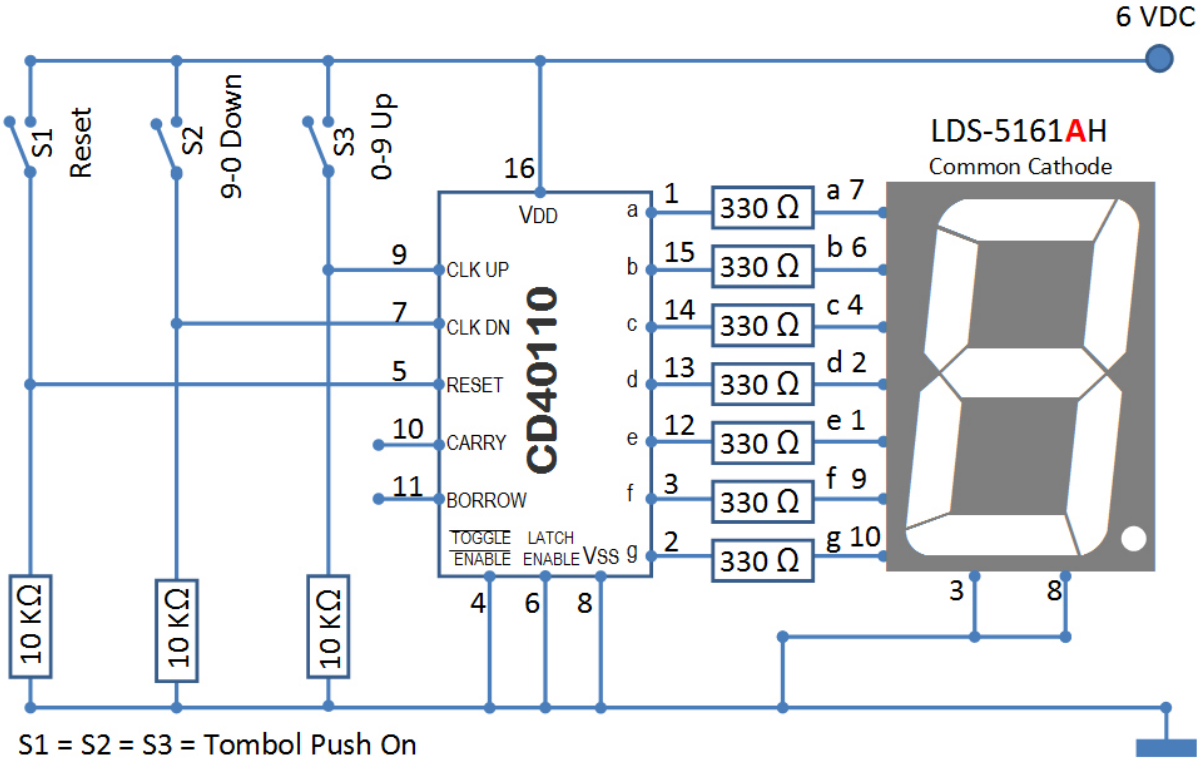

Figure 2 IC CD40110

Two **CD40110 ICs** are used to maintain the count of people inside the room. Each IC is capable of counting up or down depending on the triggering sequence from the IR sensors. The count is displayed on two common-cathode 7-segment displays.

Key Features:

- Integrated BCD up/down counter
- Direct 7-segment display driver
- Supports both increment and decrement operations
- Built-in carry and borrow functionality

These ICs form the core logic of the counting mechanism, ensuring accurate tracking of room occupancy.

2.4 Relay Module

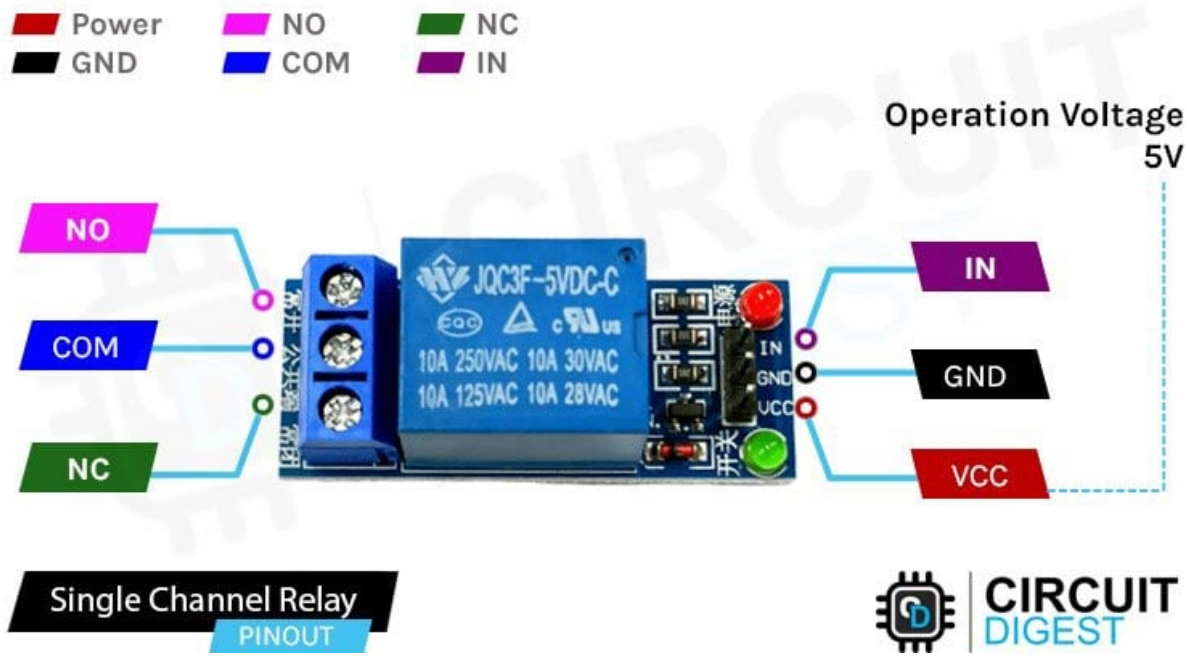

Figure 3 Relay Module

The relay module acts as the switching device for the bulb or load. When the occupancy count is greater than zero, the relay activates and turns ON the appliance. When the count reaches zero, the relay turns OFF the load.

Key Features:

- Provides electrical isolation between control and load
- Capable of switching AC loads safely
- Driven by low-voltage logic signals

2.5 Resistors

A total of 16 resistors is used throughout the circuit for various purposes such as:

- Current limiting
- Pull-up or pull-down configurations
- Signal conditioning
- Stabilizing sensor outputs

Resistors ensure reliable operation and prevent damage to sensitive components.

2.6 Capacitors

Two capacitors are included in the system primarily to prevent **false triggering** of the IR sensors. Environmental factors such as noise, stray reflections, or rapid movements can cause false logic signals. The capacitors help filter these unwanted disturbances and stabilize the sensor output.

Functions:

- Noise filtering
- Debouncing
- Signal smoothing

2.7 Optocoupler Module

Figure 4 Optocoupler Module

An optocoupler provides electrical isolation between the sensor/digital circuit and the relay/AC load circuit. This prevents voltage spikes or surges in the load section from affecting the control logic.

Key Features:

- Ensures complete isolation between low-voltage and high-voltage sections
- Protects ICs and sensors
- Reduces risk of damage from electrical noise

This makes the system safer and more reliable.

2.8 7-Segment Display (Common Cathode)

Two common-cathode 7-segment displays are used to show the current count of people in the room. The CD40110 drives these displays directly, showing numbers from 00 to 99.

Functions:

- Real-time display of occupancy
- Easy visual monitoring
- Helps verify proper system operation

2.9 NAND Gate IC

A NAND gate IC is used for **zero-detection** of the 7-segment display. When the count reaches zero, the output of the logic circuit ensures that the relay is turned OFF, cutting the power to the load.

Purpose:

- Detects when count becomes zero
- Ensures correct output logic to turn OFF the relay

This is a critical part of the automation logic.

2.10 Push Button (Reset Switch)

Figure 5 Push Button

A push button is used as a **manual reset**. In case of incorrect counting or system testing, pressing the button resets the occupancy count to zero.

Functions:

- Resets the counter ICs
- Clears the display
- Ensures system starts from a known state

2.11 Summary of System Components

Each component in the system plays a crucial role in achieving automatic power saving. The IR sensors detect movement, the CD40110 ICs handle counting, the 7-segment displays show occupancy, and the logic circuits ensure accurate decision-making. The relay module controls the actual electrical load, while resistors, capacitors, and the optocoupler ensure safe and stable operation. Together, these components enable a reliable and efficient automatic power control system.

This chapter outlines the design and development process of the **Automatic Power Saving System using IR Sensors**, breaking it down into distinct functional blocks that work together to detect human presence, maintain an occupancy count, and control electrical loads automatically. This structured approach provides a clear understanding of each component's role and how they integrate into the complete system.

3. Design and Development

3.1 Overview of the Design Process

The overall system design is divided into five major parts, each responsible for a crucial function in the automation workflow:

1. **IR-Based Human Detection**
2. **Up/Down Counting Logic**
3. **Display of Occupancy Count**
4. **Zero Detection Logic**
5. **Relay-Based Load Control**

This modular approach enables efficient troubleshooting, easy optimization, and clear performance evaluation of each subsystem.

3.1.1 IR Sensor Detection System

The design begins with the implementation of two IR sensors positioned at the entry point. Their purpose is to detect the sequence of human movement, whether someone enters or exits the room. Each sensor consists of an IR LED and a photodiode, with LM358 amplifiers used to condition the sensor output.

3.1.2 Counting and Logic Control

The conditioned signals from the IR sensors are fed into **CD40110 up/down counter ICs**. These ICs maintain an accurate count of the number of people present inside the room by incrementing or decrementing based on the triggering sequence.

3.1.3 Display Unit

The output of the CD40110 drives **common-cathode 7-segment displays** to show the real-time occupancy count (00–99). This visual feedback ensures easy monitoring and verification of the system's operation.

3.1.4 Zero Detection and Safety Logic

A NAND gate circuit is used to detect when the count reaches zero. This logic ensures that the load (such as a bulb or fan) is turned OFF automatically when no one is present.

3.1.5 Relay Load Control

The final stage involves a relay module that switches the connected appliance ON or OFF based on occupancy data. An optocoupler is used for isolation to enhance system safety.

3.2 Part 1: IR Sensor Detection Circuit

The first stage of the system focuses on accurate human detection using IR modules.

3.2.1 IR Sensor Configuration

- IR LED emits infrared light.
- Photodiode detects the reflection/blockage.
- LM358 amplifies and shapes the signal.
- NAND gate logic ensures prop
- er pulse generation.

3.3 Part 2: Up/Down Counting Using CD40110

This section handles occupancy calculation based on sensor input.

3.3.1 Counter Design

Two CD40110 ICs are cascaded to display two digits (tens and units). The ICs directly drive the 7-segment displays without needing additional decoding.

3.3.2 Up/Down Functionality

- **Entry** will do Count increments
- **Exit** will do Count decrements

Proper sensor sequencing ensures accurate counting.

3.4 Part 3: Display System (7-Segment Displays)

The count is shown on **two common-cathode 7-segment displays** driven by CD40110 outputs.

3.4.1 Visibility

Displays show numbers from **00 to 99**, representing the total number of people inside the room.

3.5 Part 4: Zero Detection Logic

Zero detection is essential to automate load OFF operation when the room is empty.

3.5.1 NAND Gate Implementation

A NAND gate checks if the output of both counter ICs corresponds to zero.

- If **count = 0** → NAND output triggers relay OFF
- If **count > 0** → Relay stays ON

The logic is simple yet highly effective for safety and power-saving.

3.6 Part 5: Relay-Based Load Control

This section converts logic-level signals into physical electrical switching.

3.6.1 Relay Circuit

A relay module controls the AC load (e.g., bulb). The relay is activated when at least one person is inside.

3.6.2 Optocoupler Isolation

The optocoupler ensures:

- Protection of low-voltage circuitry
- Isolation from AC mains
- Prevention of feedback spikes

3.6.3 Expected Output

- Load turns **ON** when count > 0
- Load turns **OFF** when count = 0

3.7 Breadboard/Proteus Implementation

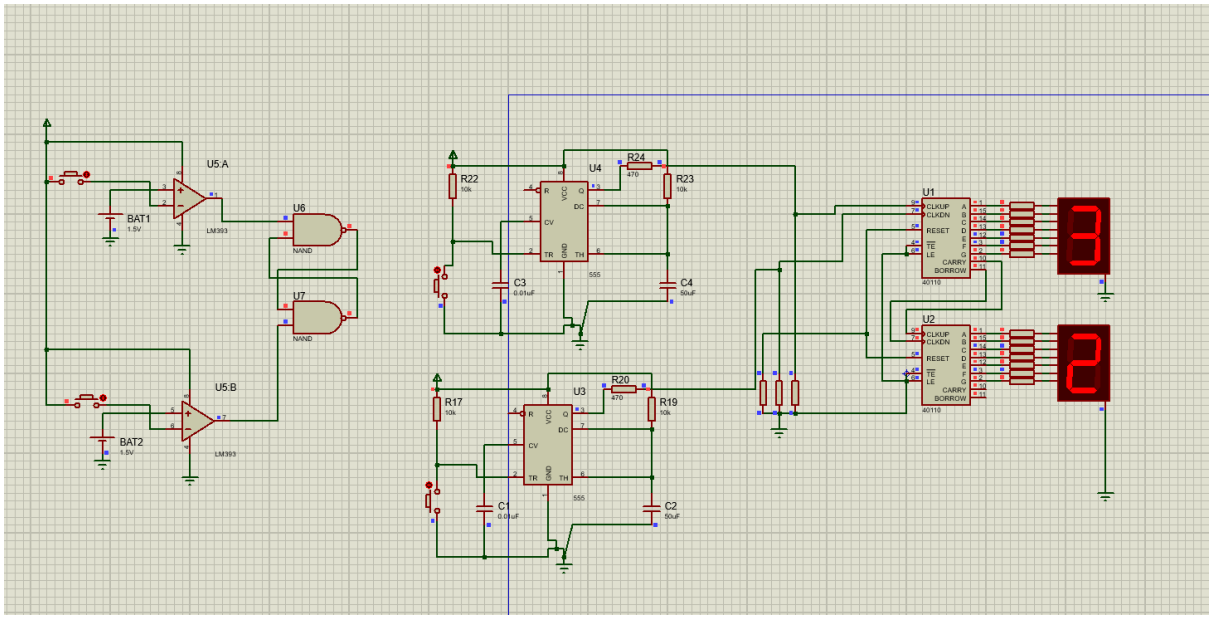

Figure 6 Proteus Simulation

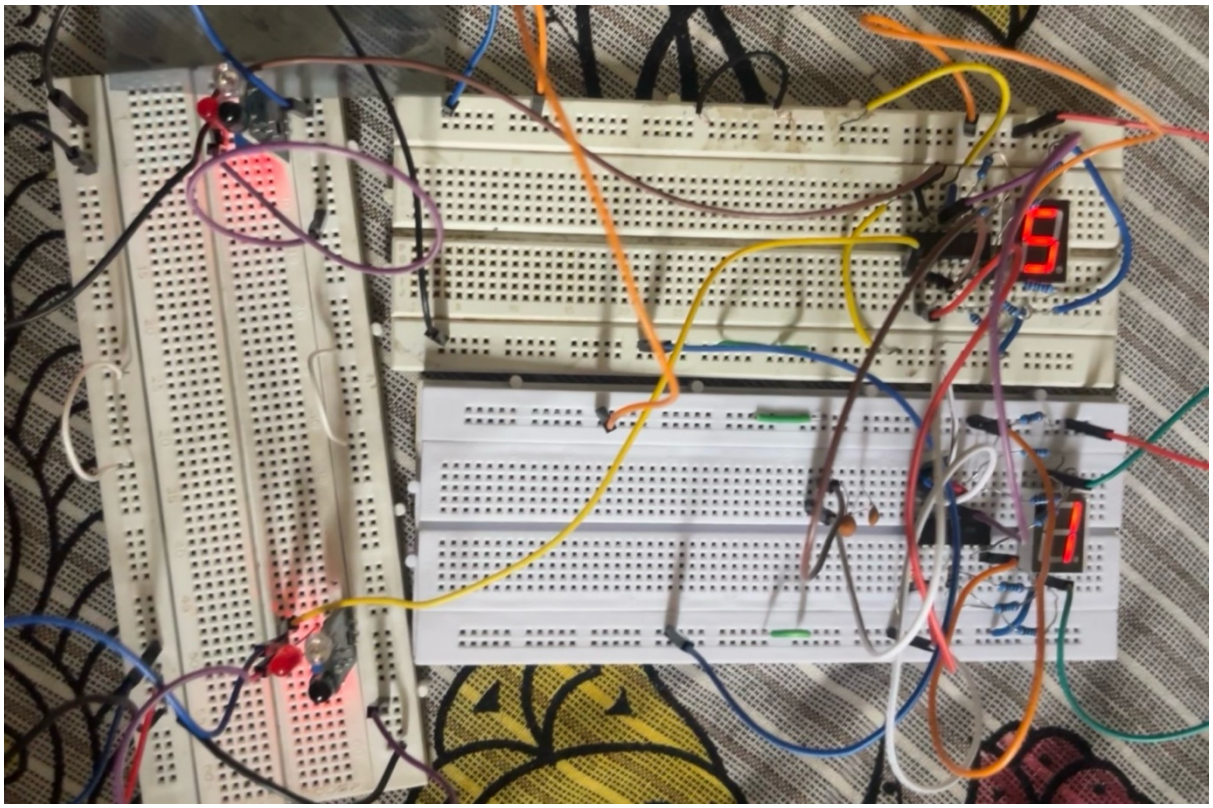

Figure 7 Breadboard Implementation

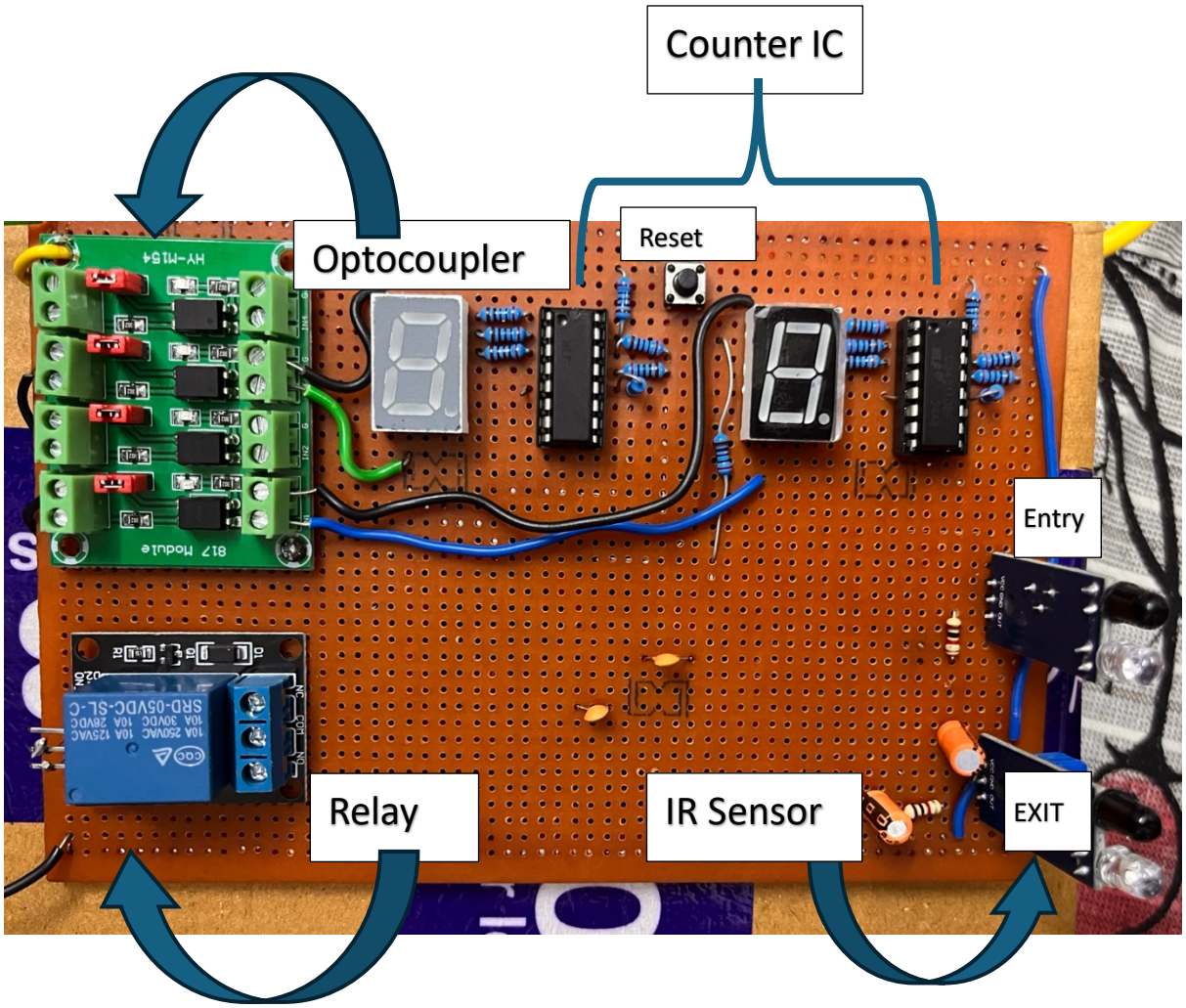

Figure 8 PCB Implementation

The complete circuit was first assembled and validated in **Proteus**, as shown in the figure you shared.
It includes:

- Dual IR sensor modules
- Amplifier and NAND gate logic
- Two CD40110 ICs
- Two 7-segment displays
- Zero detection logic
- Relay control output

Testing each block individually ensured accurate performance before full system integration.

3.8 Challenges and Solutions

IR Noise and False Triggering

- Solved by adding capacitors and adjusting sensor placement.

Incorrect Counting Due to Wrong Sequence

- Corrected using proper alignment and timing delays.

4. Testing & Results

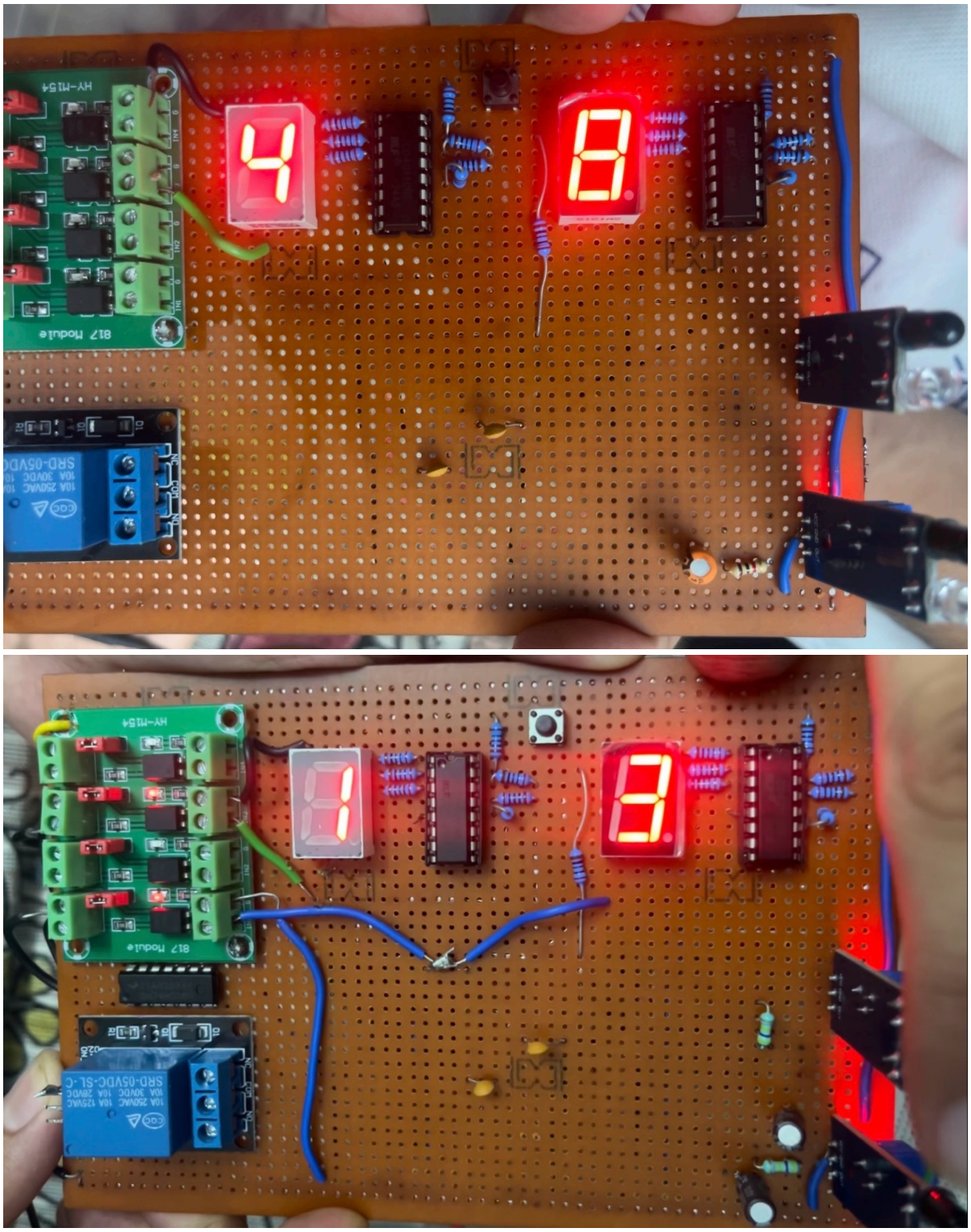

Figure 9 Working

4.1 Overview of Testing Process

The testing process was conducted systematically, beginning with individual components and progressing toward complete system integration. The main areas of focus during testing were:

1. **IR Sensor Detection**
2. **Counting Mechanism Using CD40110 ICs**
3. **Zero Detection and Logic Testing**
4. **Relay Switching Operation**
5. **Final Load (Bulb) ON/OFF Control**

Each section was examined for correctness, signal reliability, and response accuracy.

4.2 Testing of IR Sensor Modules

The first stage involved testing the two IR sensor modules used to detect entry and exit. The sensors were placed at the door frame and tested under different lighting and movement conditions.

4.2.1 Observed Output from IR Sensors

- **Detection Accuracy:** The sensors correctly detected human presence when a person passed through the doorway.
- **Response Time:** The response was instantaneous, with minimal delay.
- **False Triggering:** After adding capacitors for noise filtering, false triggers were significantly reduced.

Result:
Both IR sensors produced stable HIGH/LOW digital outputs, confirming accurate functioning.

4.3 Testing of Counting System (CD40110 ICs)

The next stage focused on verifying the counting mechanism. The IR sensors were used to trigger the UP/DOWN inputs of the CD40110 ICs.

4.3.1 Measurement of Counting Output

- **Increment Operation:** When the entry sensor was triggered, the count increased correctly.
- **Decrement Operation:** When the exit sensor was triggered, the count decreased accurately.
- **Display Output:** The connected 7-segment displays showed the correct count from 00 to 99.

Result:
The counting ICs responded accurately to the sensor inputs, maintaining correct occupancy count without errors.

4.4 Testing of Zero Detection Logic

Zero detection ensures that the system switches OFF the relay when the room becomes empty. A NAND gate circuit was used to detect when the 7-segment display showed zero.

4.4.1 Zero Detection Output

- When the count reached **zero**, the NAND gate output switched to the correct logic level to deactivate the relay.
- For any non-zero count, the circuit maintained a HIGH signal to keep the relay active.

Result:
The zero-detection logic worked reliably, ensuring correct relay operation based on occupancy.

4.5 Testing of Relay Module

The relay module controls the AC load. It was tested separately using the logic signal from the counter and NAND gate section.

4.5.1 Relay Operation Observation

- **ON State:** When count > 0, the relay activated and powered the connected bulb.
- **OFF State:** When count = 0, the relay switched OFF immediately.
- **Isolation Check:** The optocoupler safely isolated low-voltage logic from the AC load.

Result:
The relay module performed as expected, switching accurately based on occupancy.

4.6 Final System Testing (Complete Integration)

Once each module performed correctly, the entire system was tested together by simulating real entry and exit movements through the doorway.

4.6.1 Combined System Output

- **Entry:**
  - IR sensor detects movement
  - Count increments
  - Relay switches ON
  - Bulb glows
- **Exit:**
  - Exit sensor triggers
  - Count decrements
  - When count becomes **zero**, the relay switches OFF

Final Observation:
The bulb switched ON only when at least one person was present and switched OFF automatically when the room became empty.

4.7 Challenges Encountered During Testing

Several issues arose during testing:

• False IR Sensor Triggering

Initially, ambient light and noise caused random triggers. Adding capacitors helped stabilize the output.

• Synchronizing Sensor Sequence

Accurate counting required the correct sequence of ENTRY and EXIT. Proper sensor placement and alignment solved this.

4.8 Summary of Testing and Results

The testing phase confirmed that the Automatic Power Saving System functioned correctly. The IR sensors, counter ICs, logic circuits, and relay worked together to automate ON/OFF control of the electrical load based on human presence.

Key Outcomes:

- IR sensors accurately detected entry and exit.
- CD40110 counters maintained correct occupancy count.
- Zero detection logic switched relay OFF at count = 0.
- Relay reliably powered the bulb based on room occupancy.
- Entire system operated smoothly during integrated testing.

5. Design Optimization and Future Improvements

his chapter discusses the challenges encountered during the design of the Automatic Power Saving System, followed by potential optimization strategies and recommended future enhancements. It also analyzes the environmental and economic impact of adopting automated power-saving solutions.

5.1 Design Challenges Encountered

During the implementation and testing of the Automatic Power Saving System, several practical challenges were observed. Addressing these issues can significantly enhance the reliability and performance of the system.

5.1.1 IR Sensor Sensitivity Issues

One of the major challenges was maintaining accurate detection in varying lighting conditions. IR sensors exhibited false triggering due to reflections, ambient light interference, and noise. Careful calibration and improved filtering were required to stabilize the detection accuracy.

5.1.2 Accurate Counting and Synchronization

Ensuring correct entry and exit counting required precise positioning of the two IR sensors. Any delay, misalignment, or simultaneous triggering could lead to incorrect count values, causing the system to malfunction.

5.1.3 Relay Response Delay

At times, the relay exhibited minor delays, especially when switching larger loads. This created short gaps between detection and actual ON/OFF operation. A more responsive relay driver could improve switching performance.

5.2 Design Optimization Strategies

Several optimization techniques can be implemented to enhance the system's stability, accuracy, and energy efficiency.

5.2.1 Improved IR Sensor Modules

Replacing basic IR sensors with long-range or modulated IR sensors (with built-in noise rejection) would provide better accuracy, especially in environments with varying lighting conditions.

5.2.2 Enhanced Signal Filtering

Adding more robust filtering using RC networks or Schmitt trigger circuits would reduce false triggering and noise interference, ensuring smooth and clean digital outputs.

5.3 Scalability of the System

The current design supports basic occupancy-based control for a single room. However, the system can be scaled or expanded for more advanced applications.

5.3.1 Multi-Room Automation

By using additional sensors and counting circuits, the system can be expanded to control lighting in entire buildings, such as schools, offices, or hospitals.

5.3.2 Modular Expansion

Designing the system in modular blocks—sensor unit, logic unit, display unit, and load control unit can allow easy upgradation, maintenance, and customization for different environments.

5.4 Future Improvements and Recommendations

Further improvements can significantly enhance system performance and versatility.

5.4.1 Use of PIR Sensors

Passive Infrared (PIR) sensors can be added along with IR beam sensors to improve accuracy, especially for detecting people already inside the room who may not be moving near the entry point.

5.4.2 Smart Timer Features

A programmable timer can turn OFF the load if no movement is detected for a long period, adding an extra layer of energy conservation.

5.4.3 Integration with Smart Lighting

Using dimmable LEDs can enable automatic brightness control based on presence, ambient light, or time of day, further reducing power consumption.

5.5 Environmental and Economic Impact

The implementation of an automatic power-saving system results in measurable environmental and financial benefits.

5.5.1 Energy Efficiency

By ensuring lights and appliances operate only when required, energy waste is significantly reduced. This contributes to lowering carbon emissions and promoting sustainable energy usage.

5.5.2 Cost Savings

Although the system requires an initial investment in sensors and control hardware, the long-term reduction in electricity bills provides excellent cost savings. Public institutions, offices, and households can benefit financially from automated power management.

5.6 Conclusion of Design Optimization

The Automatic Power Saving System using IR sensors successfully demonstrates efficient occupancy-based control of electrical loads. While the current design performs well for basic applications, there is ample scope for improvements in detection accuracy, scalability, and intelligent automation. With enhanced sensor modules, advanced logic systems, this project can evolve into a fully automated, smart energy management solution suitable for diverse environments.

6. Future Scope

Several aspects of the Automatic Power Saving System provide opportunities for future development and enhancement:

1. **Advanced Sensor Integration:**

   The current system uses IR sensors for entry/exit detection. Future versions can integrate PIR sensors, ultrasonic sensors, or laser-based sensing to improve accuracy and reduce false triggers.

2. **Adaptive Lighting and Load Control:**

   The system can be enhanced to automatically adjust light intensity based on ambient lighting conditions using LDRs or photodiodes, thereby improving energy efficiency.

3. **Multi-Room Automation:**

   Scaling the design to support entire buildings such as schools, offices, and hostel could significantly expand its usefulness. A centralized controller could communicate with multiple sensor units for large-scale automation.

4. **Smart Algorithms for Human Detection:**

   Machine learning or AI-based occupancy detection using multiple sensor inputs can enable accurate predictions, reduce errors and enhance the system's intelligence.

5. **Improved Safety and Reliability:**

   Enhanced optocoupler circuits, surge protectors, and advanced relay drivers can improve system robustness, making it suitable for long-term, real-world deployment.

6. **Integration with Renewable Energy Systems:**

   When combined with solar-powered lighting systems, the setup can contribute to sustainable energy usage, particularly in smart buildings and eco-friendly infrastructure.

7. **Battery Backup and Power Conditioning:**

   Adding backup power options can ensure uninterrupted operation during power failures, making the system reliable in critical environments such as hospitals and laboratories.

7. References

1. Ahmed, S., et al. "Design of Automatic Room Light Controller using Passive Infrared Sensor." *International Journal of Scientific Research Engineering & Technology (IJSRET)*, 2017.

2. Kumar, P. & Gupta, R. "Energy Efficient Occupancy-Based Lighting Control System." *International Journal of Engineering Research & Technology (IJERT)*, 2019.

3. Sharma, D. "Human Detection and Counting Using IR Sensors." *International Journal of Scientific & Engineering Research (IJSER)*, 2020.

4. Electronics Tutorials – "IR Sensor Working and Applications." Available at: www.electronics-tutorials.ws

5. All About Circuits – "Counters and 7-Segment Displays." Available at: www.allaboutcircuits.com

6. Circuit Digest – "Automatic Room Light Controller with Bidirectional Visitor Counter."

7. Electronics Hub – "Relay Module Interfacing and Applications."

8. Texas Instruments. *CD40110B – CMOS BCD Up/Down Counter with 7-Segment Display Driver*, Datasheet.

9. Proteus Design Suite – Labcenter Electronics. Used for circuit simulation and testing.